USB SERIES

B TYPE FEMALE STRAIGHT&R/A TYPE

Specifications:

Current Rating	: 1.5 Amp
Voltage Rating	: 250V AC/DC
Contact resistance	: 20m Ohm Max
Insulator resistance	: 1000M ohm min.
Withstanding Voltage	: 500V AC/Minute
Operating Temperature Range	: -20°~+85°C
Max Processing Temp	: 260° for 5 seconds
Insulator Material	: Thermoplastic PBT(UL 94V-0)
Contact Material	: Phosphor Bronze
Contact Plated	: Selective Gold plated(standard)
Shell	: Copper Alloy With Nickel Plated

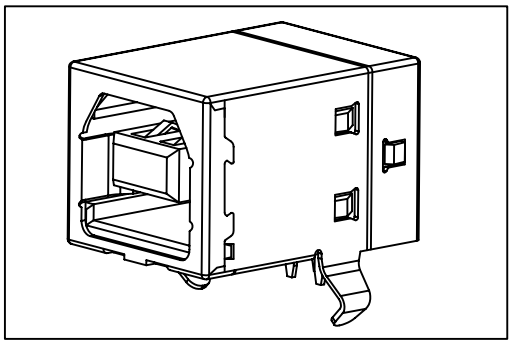

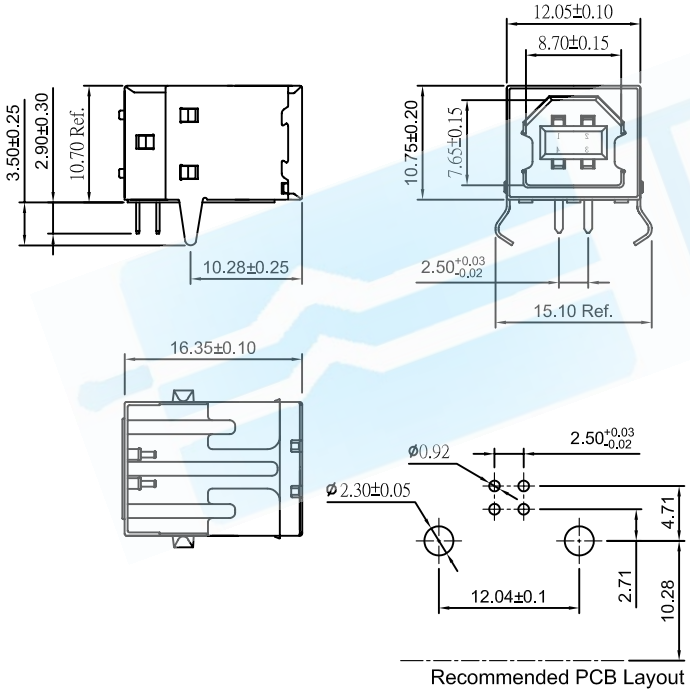

USB4S-BR1XX-X

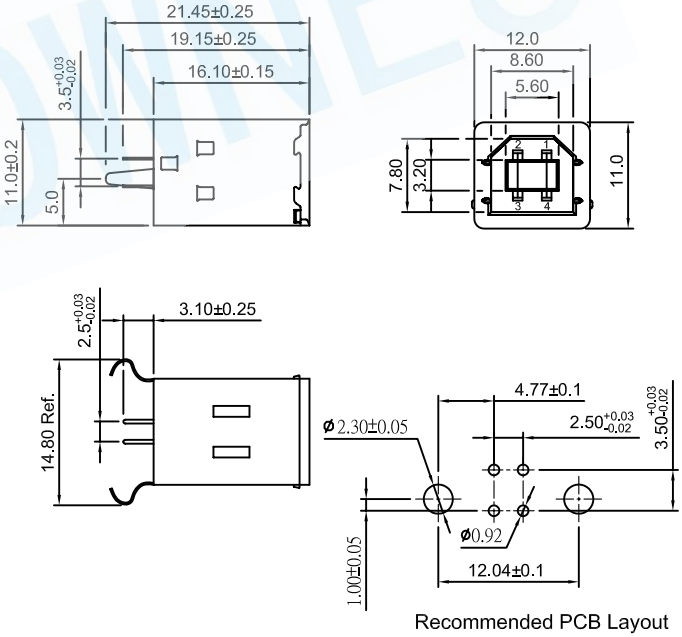

USB4S-BS1XX-X

Full Gold Type	Selective Plated Type Gold Plated on Contact Area Tin Plated on Solder Area	Full Tin Type
GF : Gold Flash G1 : Gold 3u" G2 : Gold 5u" G3 : Gold 10u" G4 : Gold 15u" G5 : Gold 20u" G6 : Gold 30u"	HF : Gold Flash, Tin 100u" H1 : Gold 3u", Tin 100u" H2 : Gold 5u", Tin 100u" H3 : Gold 10u", Tin 100u" H4 : Gold 15u", Tin 100u" H5 : Gold 20u", Tin 100u" H6 : Gold 30u", Tin 100u"	T1 : Tin 100u" T2 : Tin 200u"

How To Order

USB4S-BXXXX-X

- Insulator Color:
  - W:White
  - B:Black
- Contact Plated
  - HX : Gold Plated On Contact Area Tin Plated On Solder Area
- S1:Straight Type
  - R1:R/A Type
- B:B Type
- S:Female
- No. Of Positions